EK-X Technical Data
Vertical Order Picker

EK-X 10

EK-X

IFOY tested

IFOY AWARD
international forklift truck
of the year 2014

first in intralogistics

EK-X 10 Vertical Order Picker
The new dimension in order picking

This specification sheet to VDI guideline 2198 only gives the technical figures for selected equipment variants.

Distinguishing marks	1.1	Manufacturer			STILL	STILL	STILL
	1.2	Manufacturer's type designation			**EK-X 10 single mast without additional lift**	**EK-X 10 single mast with additional lift**	**EK-X 10 telescopic mast**
	1.3	Drive			Electric 24 V	Electric 24 V	Electric 24 V
	1.4	Operator type			Standing/order-picker	Standing/order-picker	Standing/order-picker
	1.5	Rated capacity/rated load	Q	kg	1000	1000	1000
	1.6	Load centre distance	c	mm	400	400	400
	1.8	Load distance, centre of drive axle to fork	x	mm	180	180	180
	1.9	Wheelbase	y	mm	1270	1260	1415
Weights	2.1	Service weight (incl. battery)		kg	1564	2069	2711
	2.2	Axle loading, laden drive end/load end		kg	536/2028	688/2381	1050/2661
	2.3	Axle loading, unladen drive end/load end		kg	1006/558	1168/901	1479/1232
Tyres/chassis	3.1	Tyres			Polyurethane	Polyurethane	Polyurethane
	3.2	Tyre size drive end		mm	⌀ 250 x 100	⌀ 250 x 100	⌀ 250 x 100
	3.3	Tyre size load end		mm	⌀ 125 x 105	⌀ 125 x 105	⌀ 150 x 100
	3.5	Wheels, number (x = driven wheels) drive end/load end			1x / 2	1x / 2	1x / 2
	3.7	Tread load end	b_{11}	mm	660	850	850
Dimensions	4.2	Height mast lowered	h_1	mm	1620	2530	2900
	4.4	Lift	h_3	mm	1000	1910	4550
	4.5	Height mast extended	h_4	mm	2395	4170	6810
	4.7	Height of overhead guard (cabin)	h_6	mm	-	2260	2260
	4.8	Stand height	h_7	mm	200	200	200
	4.11	Additional lift	h_9	mm	-	800	800
	4.14	Stand height, elevated	h_{12}	mm	1200	2110	4750
	4.14.1	Order picking height (h_{12} + 1600 mm) elevated	h_{28}	mm	2800	3710	6350
	4.15	Height lowered	h_{13}	mm	65	65	65
	4.19	Overall length	l_1	mm	2465	2475	2630
	4.20	Length to face of forks	l_2	mm	1665	1675	1830
	4.21	Overall width	b_1/b_2	mm	790/790	980/980	980/980
	4.22	Fork dimensions	s/e/l	mm	60/120/800	60/120/800	60/120/800
	4.23	Fork carriage ISO 2328, class/type A, B			Welded forks	Welded forks	Welded forks
	4.24	Fork-carriage width	b_3	mm	-	740	740
	4.25	Distance between fork-arms	b_5	mm	560	640	640
	4.27	Width across guide rolls	b_6	mm	-	1375	1375
	4.31	Ground clearance, laden, below mast	m_1	mm	40	40	38
	4.32	Ground clearance, centre of wheelbase	m_2	mm	40	40	38
	4.34.1	Aisle width for pallets 1200 x 800 lengthwise	A_{st}	mm	3122	-	-
	4.34.2	Aisle width for pallets 1200 x 800 crosswise	A_{st}	mm	2834	1380	1380
	4.35	Turning radius	W_a	mm	1485	1495	1650
	4.42	Transfere aisle with, minimum	A_u	mm	2834	2844	2999
	4.45	Clear driver compartment height inside		mm	-	2000	2000
Performance data	5.1	Travel speed laden/unladen		km/h	9.0/9.0	10.0/10.0	10.0/10.0
	5.2	Lift speed laden/unladen		m/s	0.15/0.19	0.18/0.25	0.22/0.31
	5.3	Lowering speed laden/unladen		m/s	0.30/0.24	0.30/0.24	0.30/0.24
	5.9	Acceleration time (over 10 m) laden/unladen		s	7/7	7/7	7/7
	5.10	Service brake			Regenerative	Regenerative	Regenerative
Electric engine	6.1	Drive motor rating S2 60 min		kW	3.0	3.0	3.0
	6.2	Lift motor rating at S3 15%		kW	3.2 [1]	4.0	7.6
	6.3	Battery according to DIN 43535			3PzS 420/B	4PzS 560/B	4PzS 560/B
	6.4	Battery voltage/nominal capacity K_5		V/Ah	24/420	24/560	24/560
	6.5	Battery weight (dependent on manufacturer ±5%)		kg	385	502	502
Other	10.7	Sound level at the driver's seat		dB(A)	61	63	69
		With our VNAP tool we will calculate the technical specifications of the truck with your individual equipment. The calculated speed profiles are based on our floor quality rules. Subject to change without notice. Values can vary ±10%.					

[1] S3 = 10%

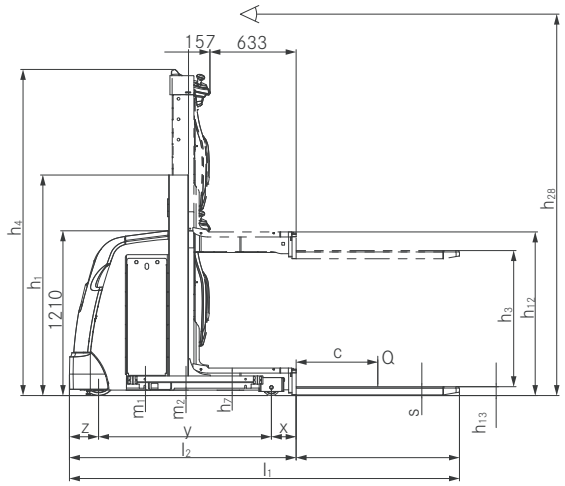

Side view single mast without auxiliary lift

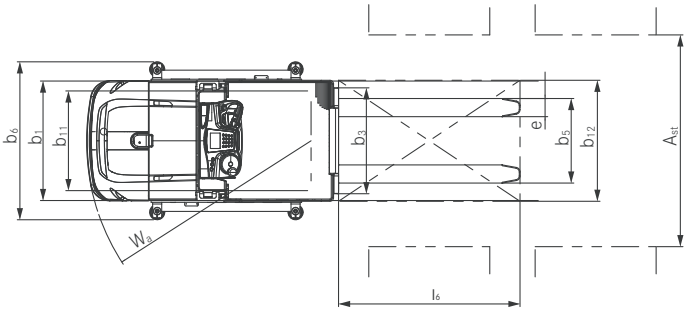

Top view single mast without auxiliary lift

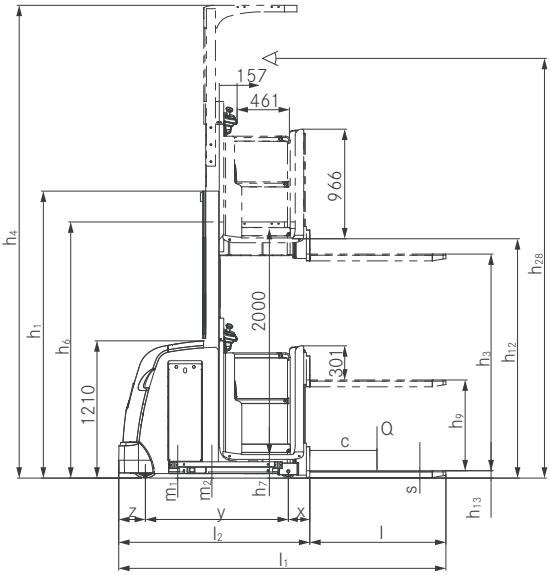

Side view single lift mast with auxiliary lift

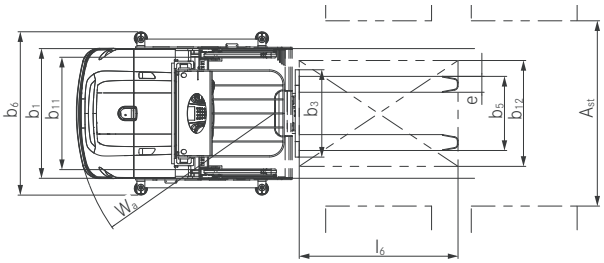

Top view single lift mast with auxiliary lift

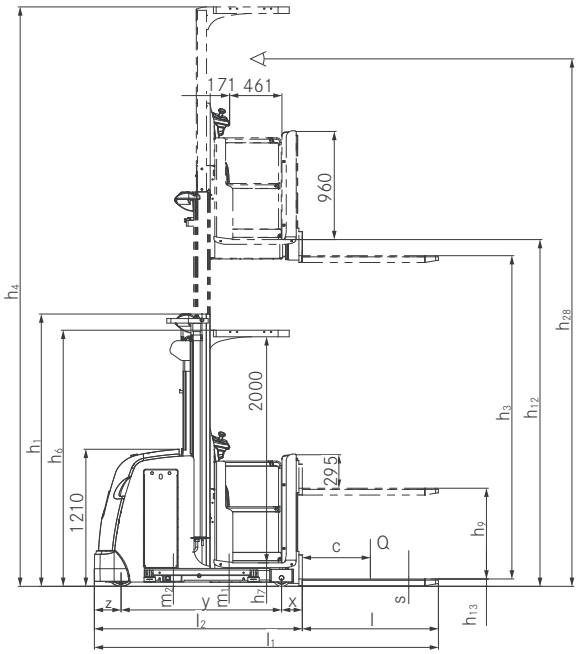

Side view telescopic mast with auxiliary lift

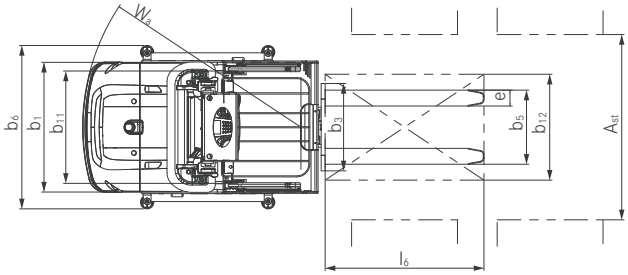

Top view telescopic lift mast with auxiliary lift

EK-X 10 Vertical Order Picker
Mast Tables

EK-X 10 single mast without additional lift	Height, mast lowered	h_1	mm	1,620	2,120	2,530
	Total lift above floor	h_{25} ($h_3 + h_9 + h_{13}$)	mm	1,065	1,565	1,975
	Total lift	h_{24} ($h_3 + h_9$)	mm	1,000	1,500	1,910
	Nominal lift	h_3	mm	1,000	1,500	1,910
	Height, lowered	h_{13}	mm	65	65	65
	Additional lift	h_9	mm	0	0	0
	Stand height, elevated	h_{12} ($h_3 + h_7$)	mm	1,200	1,700	2,110
	Picking height	h_{28} ($h_{12} + 1600$)	mm	2,800	3,300	3,710
	Height, mast extended [1]	h_4	mm	2,395	3,760	4,170
EK-X 10 single mast with additional lift	Height, mast lowered	h_1	mm	1,620	2,120	2,530
	Total lift above floor	h_{25} ($h_3 + h_9 + h_{13}$)	mm	1,865	2,365	2,775
	Total lift	h_{24} ($h_3 + h_9$)	mm	1,800	2,300	2,710
	Nominal lift	h_3	mm	1,000	1,500	1,910
	Height, lowered	h_{13}	mm	65	65	65
	Additional lift	h_9	mm	800	800	800
	Stand height, elevated	h_{12} ($h_3 + h_7$)	mm	1,200	1,700	2,110
	Picking height	h_{28} ($h_{12} + 1600$)	mm	2,800	3,300	3,710
	Height, mast extended [1]	h_4	mm	2,395	3,760	4,170
EK-X 10 telescopic mast without additional lift	Height, mast lowered	h_1	mm	2,400	2,900	
	Total lift above floor	h_{25} ($h_3 + h_9 + h_{13}$)	mm	3,615	4,615	
	Total lift	h_{24} ($h_3 + h_9$)	mm	3,550	4,550	
	Nominal lift	h_3	mm	3,550	4,550	
	Height, lowered	h_{13}	mm	65	65	
	Additional lift	h_9	mm	0	0	
	Stand height, elevated	h_{12} ($h_3 + h_7$)	mm	3,750	4,750	
	Picking height	h_{28} ($h_{12} + 1600$)	mm	5,350	6,350	
	Height, mast extended [1]	h_4	mm	5,810	6,810	
EK-X 10 telescopic mast with additional lift	Height, mast lowered	h_1	mm	2,400	2,900	
	Total lift above floor	h_{25} ($h_3 + h_9 + h_{13}$)	mm	4,415	5,415	
	Total lift	h_{24} ($h_3 + h_9$)	mm	4,350	5,350	
	Nominal lift	h_3	mm	3,550	4,550	
	Height, lowered	h_{13}	mm	65	65	
	Additional lift	h_9	mm	800	800	
	Stand height, elevated	h_{12} ($h_3 + h_7$)	mm	3,750	4,750	
	Picking height	h_{28} ($h_{12} + 1600$)	mm	5,350	6,350	
	Height, mast extended [1]	h_4	mm	5,810	6,810	

[1] Dimensions h_4 apply for driver roof with a clear height of 2000 mm

Detailed Photos

Perfect visibility through the mast for safe and fast manoeuvrability

Flexible mounting options for ideal working conditions

Safe two-hand operation of the auxiliary lift

Optional STILL Safety Light increases warehouse safety

Customer-specific access concepts

Knee upholstering on the load end cabin wall

Controls on both sides of the cabin

Truck-specific equipment options

Easy battery change and safe positioning of the battery

Battery compartment cover can be opened and closed without tools

EK-X Vertical Order Picker
The new dimension in order picking

This specification sheet to VDI guideline 2198 only gives the technical figures for selected equipment variants.

Distinguishing marks	1.1	Manufacturer				STILL	STILL	STILL	STILL
	1.2	Manufacturer's type designation				**EK-X telescopic mast**	**EK-X triplex mast**	**EK-X telescopic mast**	**EK-X triplex mast**
	1.3	Drive				Electric 24 V	Electric 24 V	Electric 48 V	Electric 48 V
	1.4	Operator type				Standing/order-picker	Standing/order-picker	Standing/order-picker	Standing/order-picker
	1.5	Rated capacity/rated load		Q	kg	1000	1000	1200	1200
	1.6	Load centre distance		c	mm	400	400	400	400
	1.8	Load distance, centre of drive axle to fork		x	mm	345	405	345	405
	1.9	Wheelbase		y	mm	1487	1595	1520	1628
Weights	2.1	Service weight (incl. battery)			kg	2887	3688	2948	3747
	2.2	Axle loading, laden	drive end/load end		kg	1094/2793	1502/3186	1027/3121	1427/3520
	2.3	Axle loading, unladen	drive end/load end		kg	1636/1250	2062/1627	1664/1283	2085/1662
Tyres/chassis	3.1	Tyres				Polyurethane	Polyurethane	Polyurethane	Polyurethane
	3.2	Tyre size	drive end		mm	ø 360 x 130	ø 360 x 130	ø 360 x 130	ø 360 x 130
	3.3	Tyre size	load end		mm	ø 180 x 156	ø 180 x 156	ø 180 x 156	ø 180 x 156
	3.5	Wheels, number (x = driven wheels)	drive end/load end			1x / 2	1x / 2	1x / 2	1x / 2
	3.7	Tread	load end	b_{11}	mm	700	1000	700	1000
Dimensions	4.2	Height	mast lowered	h_1	mm	2250	2250	2250	2250
	4.3	Free lift		h_2	mm	-	1600	-	1600
	4.4	Lift		h_3	mm	2825	4410	2825	4410
	4.5	Height	mast extended	h_4	mm	5315	6900	5315	6900
	4.7	Height of overhead guard (cabin)		h_6	mm	2490	2490	2490	2490
	4.8	Stand height		h_7	mm	240	240	240	240
	4.11	Additional lift		h_9	mm	740	740	740	740
	4.14	Stand height	elevated	h_{12}	mm	3065	4650	3065	4650
	4.14.1	Order picking height (h_{12} + 1600 mm)	elevated	h_{28}	mm	4665	6250	4665	6250
	4.15	Height	lowered	h_{13}	mm	65	65	65	65
	4.19	Overall length		l_1	mm	3277	3126	3310	3159
	4.20	Length to face of forks		l_2	mm	2077	2326	2110	2359
	4.21	Overall width		b_1/b_2	mm	880/880	1180/1180	880/880	1180/1180
	4.22	Fork dimensions		s/e/l	mm	55/120/1200	55/120/800	55/120/1200	55/120/800
	4.23	Fork carriage ISO 2328, class/type A, B				Welded forks	Welded forks	Welded forks	Welded forks
	4.24	Fork-carriage width		b_3	mm	660	740	660	740
	4.25	Distance between fork-arms		b_5	mm	560	640	560	640
	4.27	Width across guide rolls		b_6	mm	1155	1375	1155	1375
	4.31	Ground clearance, laden, below mast		m_1	mm	50	50	50	50
	4.32	Ground clearance, centre of wheelbase		m_2	mm	50	50	50	50
	4.34.1	Aisle width for pallets 1200 x 800 lengthwise		A_{st}	mm	1160	-	1160	-
	4.34.2	Aisle width for pallets 1200 x 800 crosswise		A_{st}	mm	-	1380	-	1380
	4.35	Turning radius		W_a	mm	1732	2040	1765	2071
	4.42	Transfere aisle with, minimum		A_u	mm	3528	3586	3561	3617
	4.44	Clear width driver compartment entrance			mm	640	640	640	640
	4.45	Clear driver compartment height inside			mm	2200	2200	2200	2200
Performance data	5.1	Travel speed	laden/unladen		km/h	10.0/10.0	10.0/10.0	11.0/11.0	13.0/13.0
	5.2	Lift speed	laden/unladen		m/s	0.23/0.30	0.20/0.30	0.32/0.40	0.36/0.40
	5.3	Lowering speed	laden/unladen		m/s	0.28/0.28	0.28/0.28	0.35/0.35	0.35/0.35
	5.9	Acceleration time (over 10 m)	laden/unladen		s	7/7	7/7	6/6	6/6
	5.10	Service brake				Regenerative	Regenerative	Regenerative	Regenerative
Electric engine	6.1	Drive motor rating S2 60 min			kW	4.0	4.0	6.5	6.5
	6.2	Lift motor rating at S3 15%			kW	7.6	7.6	13	13
	6.3	Battery according to DIN 43535				6 EPzS 840/A	8 EPzS 1120/A	3 EPzS 420/A	4 EPzS 560/A
	6.4	Battery voltage/nominal capacity K_5			V/Ah	24/840	24/1120	48/420	48/560
	6.5	Battery weight (dependent on manufacturer ±5%)			kg	687	883	739	933
Other	10.7	Sound level at the driver's seat			dB(A)	61	61	61	61
		With our VNAP tool we will calculate the technical specifications of the truck with your individual equipment. The calculated speed profiles are based on our floor quality rules. Subject to change without notice. Values can vary ±10%.							

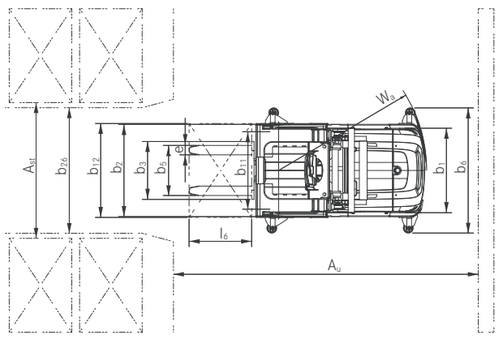

Top view

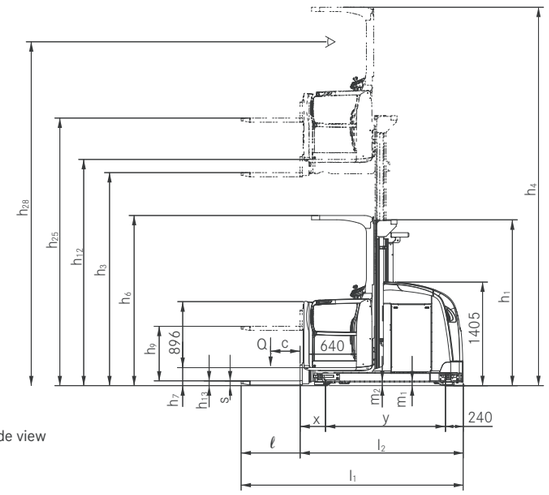

Side view

EK-X Vertical Order Picker
Mast Tables

EK-X telescopic masts with additional lift	Height, mast lowered	h_1	mm	2,250	2,450	2,900	3,400	3,900	4,400	4,900	5,400
	Total lift above floor	h_{25} ($h_3 + h_9 + h_{13}$)	mm	3,625	4,025	4,925	5,925	6,525	7,525	8,525	9,325
	Total lift	h_{24} ($h_3 + h_9$)	mm	3,565	3,965	4,865	5,865	6,465	7,465	8,465	9,265
	Nominal lift	h_3	mm	2,825	3,225	4,125	5,125	5,725	6,725	7,725	8,525
	Height, lowered	h_{13}	mm	60	60	60	60	60	60	60	60
	Additional lift	h_9	mm	740	740	740	740	740	740	740	740
	Stand height, elevated	h_{12} ($h_3 + h_7$)	mm	3,065	3,465	4,365	5,365	5,965	6,965	7,965	8,765
	Picking height	h_{28} ($h_{12} + 1600$)	mm	4,665	5,065	5,965	6,965	7,565	8,565	9,565	10,365
	Height, mast extended [1]	h_4	mm	5,115	5,515	6,415	7,415	8,015	9,015	10,015	10,815
EK-X triplex masts with additional lift	Height, mast lowered	h_1	mm	2,250	2,450	2,900	3,400	3,900	4,500		
	Total lift above floor	h_{25} ($h_3 + h_9 + h_{13}$)	mm	5,210	5,810	7,160	7,960	9,460	10,960		
	Total lift	h_{24} ($h_3 + h_9$)	mm	5,150	5,750	7,100	7,900	9,400	10,900		
	Nominal lift	h_3	mm	4,410	5,010	6,360	7,160	8,660	10,160		
	Free lift	h_2	mm	1,600	1,800	2,250	2,750	3,250	3,850		
	Height, lowered	h_{13}	mm	60	60	60	60	60	60		
	Additional lift	h_9	mm	740	740	740	740	740	740		
	Stand height, elevated	h_{12} ($h_3 + h_7$)	mm	4,650	5,250	6,600	7,400	8,900	10,400		
	Picking height	h_{28} ($h_{12} + 1600$)	mm	6,250	6,850	8,200	9,000	10,500	12,000		
	Height, mast extended [1]	h_4	mm	6,700	7,300	8,650	9,450	10,950	12,450		

[1] Dimensions h_4 apply for driver roof with a clear height of 2000 mm. Intermediate heights on request.

Spacious driver workplace

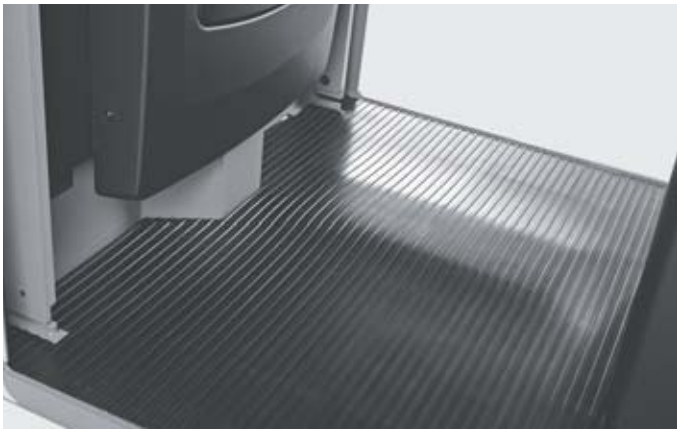

Shock-absorbing floor with integrated drive switch

Tilting bar for ergonomic order picking to the last article on the pallet

Drive end and load end operation for optimum truck utilisation

Maximum space for order picking thanks to walk-on pallet

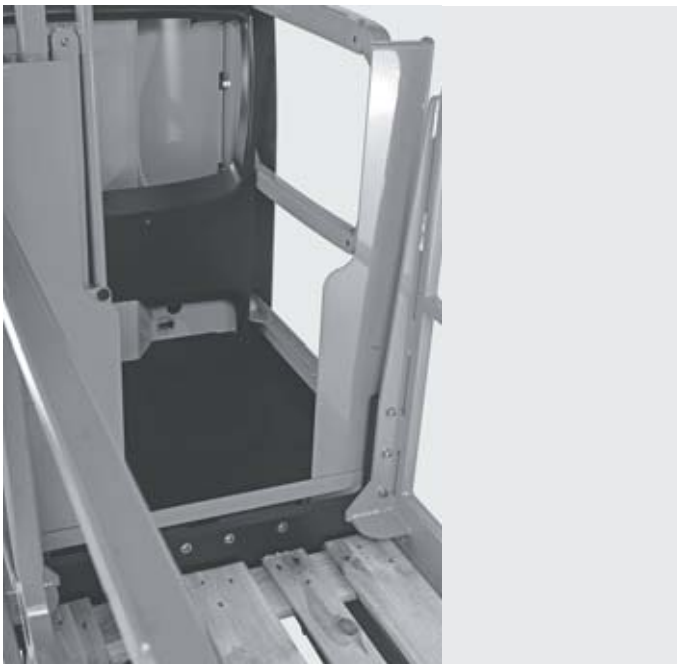

Easy and safe pallet access through open barrier

EK-X Vertical Order Picker
The new dimension in order picking

Optimum use of storage space: picking heights of up to 12 metres

Large and spacious cabin for maximum freedom of movement

Optimally adjustable to any warehouse: customised solution thanks to modular design

It's the Prince of Pickers and Nobility in any narrow-aisle warehouse: the EK-X vertical order picker sets the benchmark in terms of performance, picking height, residual load capacity, functionality and ergonomics.
The EK-X forges ahead into new dimensions of efficient goods handling with driving speeds up to 13 km/h and lifting speeds up to 0.4 m/s. Thanks to the OPTISPEED system, this compact warehouse helper is always on the move at maximum speed – without impairing safe driving.

Other features include an excellent field of view and a maximum pick height of 12 meters - outstanding in the truest sense of the word – as well as a roomy, shock-absorbing driver's cabin.
In short: if you want the most efficient, user-friendly picking warehouse management, you can't do without an EK-X. Moreover, the modular system allows the optimum EK-X to be custom-built for every warehouse.

Extensive Equipment

Power

- Maintenance-free 3-phase drive unit, 24 V or 48 V
- Effective goods handling due to very high driving and lifting speeds (13 km/h and 0.4 m/s)
- Enough energy for multi-shift operations thanks to battery capacities up to 1240 Ah (24 V) or 930 Ah (48 V)
- Powerful auxiliary lift for efficient order picking

Precision

- Sensitive operation and stepless control of lift speed thanks to state-of-the-art proportional valve technology
- Power-optimized driving speeds through accurate height sensing
- Maximum possible operating speed for each load weight thanks to the OPTISPEED-System
- Easier workload through semiautomatic approach to shelf with OPTISPEED 4.0

Ergonomics

- Quick, safe personnel entry and exit thanks to generously sized, low-level entry area
- High degree of movement freedom due to roomy driver's cabin
- Shock-absorbing floor with integrated drive switch guarantees relaxed working
- Effective working with any body size thanks to low cabin wall and small distance to load carrier
- Optional tilting side barriers for even easier access to goods
- Intuitive and optionally height-adjustable control panel for ergonomic work
- Wide variety of equipment options for the driver's cabin (e. g. attachment system for terminals etc., storage option, leaning support, 12 volt power socket)

Safety

- Safe handling in a very narrow aisle with mechanical or inductive guidance
- Long-life, energy-saving LED headlights for optimum visibility
- Optional OPTISAFE system gives optimum support when navigating and operating the vehicle in sensitive warehouse areas
- Safe operation through sensor-controlled two-handed operation
- Faster servicing due to easily accessible service points

Environmental responsibility

- Longer operating time and optimum use of resources through energy recovery during braking and lowering operations
- Blue-Q efficiency mode saves up to 10 percent energy at the push of a button without sacrificing power
- 90 percent of all the materials used are recyclable

EK-X Vertical Order Picker
Equipment Variants

		EK-X 10 b_1 = 790 mm	EK-X 10 b_1 = 980 mm	EK-X 24 V b_1 = 880-1580 mm	EK-X 48 V b_1 = 880-1580 mm
Driver workplace	Shock-absorbing work space for optimum comfort on bumpy floors and trespasses	●	●	●	●
	Integrated storage compartments, bottle holder	●	●	●	●
	LCD display indicating truck status and lift height	○	○	●	●
	Tilting barrier for optimum reach	○	○	○	○
	Cabins for different widths	○	○	○	○
	Control panel on mast end	●	●	●	●
	Control panel on mast end or on both sides	○	○	○	○
	Height-adjustable control panel	—	—	○	○
	Auxiliary lift control on both sides	○	○	○	○
	Knee upholstering for support when order picking	○	○	○	○
	Adjustable lean on support for load end work	○	○	○	○
	Overhead guard height 2000 mm	○	○	●	●
	Overhead guard height 2200 mm	○	○	○	○
Steering	Steering wheel or steering knob	●	●	●	●
	Redundant steering safety system	●	●	●	●
	Fully electric 180° steering	●	●	●	●
Mast	Free view mast	—	—	●	●
	Single mast	○	○	—	—
	Tele mast	○	○	○	○
	Triple free view mast with free view	—	—	○	○
	Mast transition dampening	—	—	●	●
	Auxiliary lift	○	○	○	○
Hydraulics	Noise-optimised hydraulic pump	●	●	●	●
	Proportional valve technology for particularly sensitive movements	●	●	●	●
	Individual parametrisation of hydraulic functions	●	●	●	●
	Energy recovery when lowering	—	—	●	●
Drives	Jerk-free, stepless acceleration up to top speed	●	●	●	●
	Maintenance-free drives for driving, steering and lifting	●	●	●	●
	Fully capsulated, dirt- and dust-resistant component	●	●	●	●
	Integrated current and temperature sensors for function monitoring	●	●	●	●
Brakes	Regenerative brake system	●	●	●	●
	Energy recovery when braking	●	●	●	●
	Additional electric load wheel brake	—	—	○	○
Battery system	Battery roller track for lateral battery change	○	○	○	○
	Battery change by forklift truck	—	—	○	○
	Battery change by crane	○	○	—	—
	Battery compartment for 360 Ah to 465 Ah	●	—	—	●
	Battery compartment for 400 Ah to 500 Ah	—	○	—	—
	Battery compartment for 480 Ah to 620 Ah	○	○	—	○
	Battery compartment for 720 Ah to 930 Ah	—	○	●	○
	Battery compartment for 720 Ah to 1240 Ah	—	—	○	○
	Lateral battery compartment cover	○	○	○	○
Safety and performance	FleetManager: access authorisation, shock detection, reports	○	○	○	○
	Rail guidance with entrance rollers	○	○	○	○
	Wire guidance with automatic loop finder	—	○	○	○
	OPTISPEED: lift height- and load-controlled speed control	—	—	○	○
	PIN code access, keyless with push button	○	○	○	○
	Warning light	○	○	●	●
	STILL Safety Light	○	○	○	○
	Spot lights	○	○	○	○
	Dimmable cabin light	○	○	○	○
	Plastic overhead guard cover	○	○	○	○
	Steering angle-controlled cornering speed reduction	○	○	●	●
	Lift cut-out and lowering stop	○	○	○	○
	Drive cut-out	○	○	○	○
	Preparation for PSA	—	○	○	○
	Automatic end-of-aisle stop	—	○	○	○
	Heavy Duty performance package for lifting	○	○	○	○
	Heavy Duty performance package for driving	—	—	○	○
	Contactless collision guard on overhead guard	○	○	○	○
	Anti-static version	○	○	○	○
Auxiliary equipment	Different fork lengths	○	○	○	○
	FEM fork carriage	○	○	○	○
	Preparation for data terminal and printer	○	○	○	○
	Cold store version	○	○	○	○
	Fan	○	○	○	○
	Mounting bar system for terminal, writing pad and other accessory	○	○	○	○
	Preparation for radio	○	○	○	○
	Walk-on pallet with railing	○	○	○	○
	12 V socket	○	○	○	○
	Pedestrian operation for floor level order picking	○	○	—	—

● Standard ○ Optional — Not available

UAB Forksis

Contact us

If you have any questions or if you want more information we are at your disposal.

Vilniaus m. sav. Vilniaus m. Kirtimu g. 2, 6 korpusas. Vilnius

Sales department:
Tel.: +370 65 573 113

Service department:
Tel.: +370 65 573 112

E-mail:
info@forksis.lt

Online services:
www.forksis.lt